Herakulix® KI 200

TECHNICAL DATA SHEET

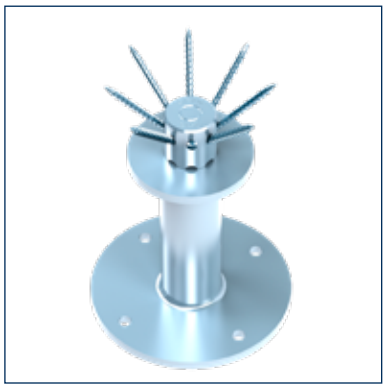

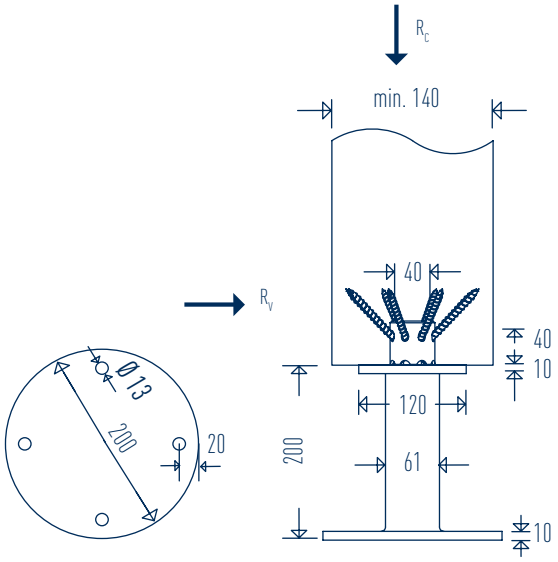

SIHGA®		Herakulix®	IdeFix®	Characteristic Values* with Normal Force			Rated Values Impact Recommended for Carports	
objektpack		KI	IF	Thrust [kN]	Traction [kN]	Shear Force [kN]	Thrust [kN]	Transversse Force [kN]
Art. No.	PU	Type	Type	$R_{c,k}$	$R_{t,k}$	$R_{v,k}$	$R_{c,d}$	$R_{v,d}$
51547	2	**KI 200**	406	237,5	29,00	10,00	50,00[1]	10,00[2]

* characteristic values for design according to EC 5 and strength class C24 (ρk 350 kg/m³)
[1] deformed condition: exceptional load case as per EC: partial safety factors for constant loads (1.35) and variable loads (1.5) may be set to 1.0 and snow below 1000 m may be reduced by 80 %.
[2] impact load car at a bumper height of 337.5 cm and at a speed of 5 km / h (requirement: Betsi A4 12 x 118 or equivalent load values)

DETAILS

- takes up to 237.5 kN per attachment point, 29 kN tensile force 10 kN impact load (requirement: anchoring with Betsi A4 12 x 118 or same design values)
- high corrosion and splash protection due to coating
- three-dimensional screwing with IdeFix® in the end grain
- permanent wood connection

ETA-18/0886

TAKE THE BEST

KLIMANEUTRALES UNTERNEHMEN certified by Fokus Zukunft

Leitbetrieb Österreich Leitbetrieb Deutschland