IdeFix® IF/IFD

TECHNICAL DATA SHEET

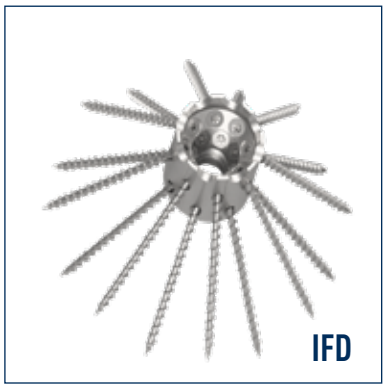

Dimension	Dimension	Connection	Tensile Force Connection		Transverse Force Connection*		Locking Device
IdeFix® IF/IFD	dc	Thread	Bore [mm]		Bore [mm]		vc
Type	[mm]	AG	A	B	A	B	[mm]
304/306 /308	30	M 12	27	0	20	7	3
406/408/410	40	M 16	35	0	25	10	5
509	50	M 20	45	0	30	15	5
508/510	50	M 20	45	0	35	10	5

* for multiple joints, the drill hole B is increased by the anti-twist protection vc

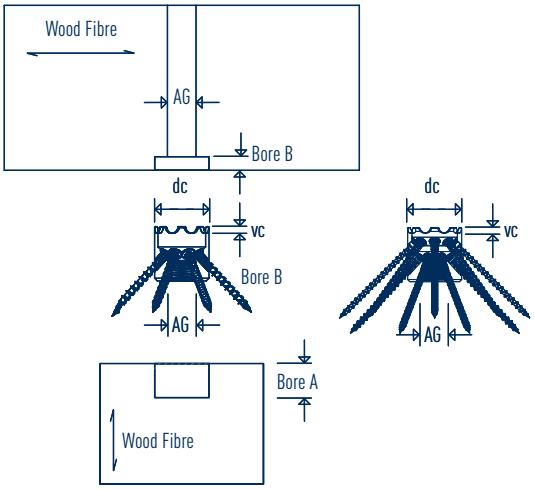

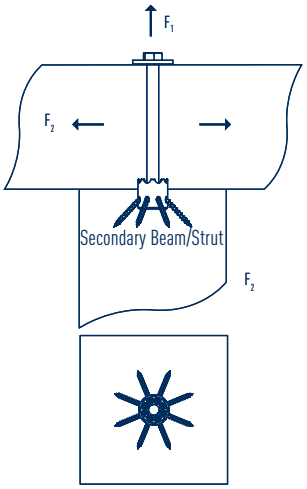

SIHGA®		Dimension		System Screw		Secondary Beam/ Strut		Characteristic Values*	
montagepack		IdeFix® IF/IFD		GoFix® HK	Quantity	Edge/ axis distance	Height/ Width	Tension F_1	Transverse F_2
Art. No.	PU		Type	[mm]	Stk.	[mm]	[mm]	[kN]	[kN]
28806	24	**IF**	**304**	5,0 x 40	8	50	100	19,90	11,81
28866	24	**IF**	**306**	5,0 x 60	8	60	120	30,20	11,81
28816	24	**IF**	**308**	5,0 x 80	8	70	140	38,80	11,81
28826	12	**IF**	**406**	6,0 x 60	8	60	120	34,20	20,27
28886	12	**IF**	**408**	6,0 x 80	8	80	160	44,90	20,27
28836	12	**IF**	**410**	6,0 x 100	8	90	180	44,60	20,27
28846	6	**IF**	**509**	8,0 x 90	8	80	160	56,00	20,50
28856	6	**IFD**	**508**	6,0 x 80	16	80 / 160	160	71,90	20,50
28876	6	**IFD**	**510**	6,0 x 100	16	100 / 200	200	87,30	30,70

* characteristic values for dimensioning according to EC 5 and strength class C 24 (ρk 350 kg/m³)

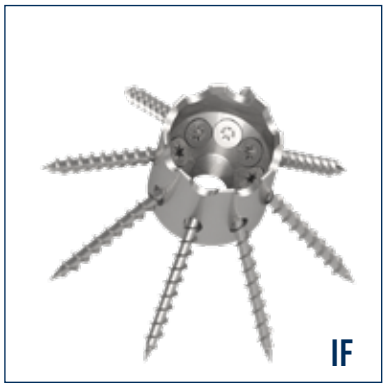

DETAILS

- even in end-grain wood, IdeFix® IF transfers extremely high tensile and shearing (transverse) forces, up to 101.6 kN per fastening point
- easy installation, only insert in hole with 30, 40 or 50 mm diameter and depth

Tipp: For drilling by hand, we recommend the IdeFix® Drill Gauge IBL with drill.

ETA-14/0160

TAKE THE BEST

Leitbetrieb Österreich Leitbetrieb Deutschland

IdeFix® IF/IFD

TECHNICAL DATA SHEET

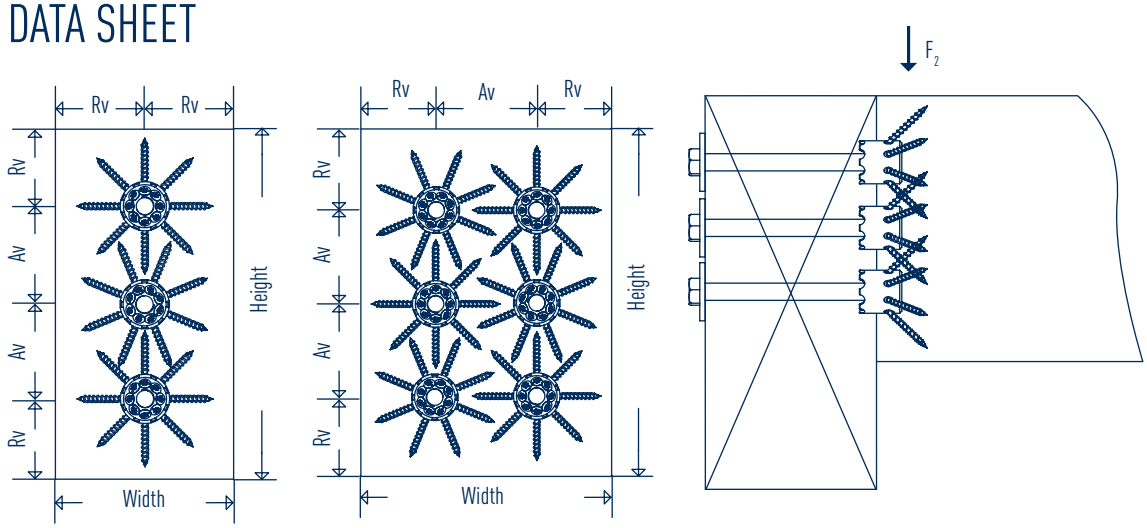

Edge and Axial Distances

IdeFix® IF

Type	Rv	Av
304	50	50
406	60	60
509	80	80

SIHGA®		Type	Secondary Beam		Quantity	Characteristic Values*	Secondary Beam		Quantity	Characteristic Values*
montagepack		IdeFix®	Width	Height	Connector	Shear Force F_2	Width	Height	Connector	Shear Force F_2
Art. No.	PU	IF	[mm]	[mm]	Pieces	[kN]	[mm]	[mm]	Pieces	[kN]
28806	24	**304**	100	150	2	20,20	150	150	4	40,40
28826	12	**406**	120	180	2	26,00	180	180	4	52,00
28846	6	**509**	160	240	2	41,00	240	240	4	82,00
28806	24	**304**	100	200	3	30,30	150	200	6	60,60
28826	12	**406**	120	240	3	39,00	180	240	6	78,00
28846	6	**509**	160	320	3	61,50	240	320	6	123,00
28806	24	**304**	100	250	4	40,40	150	250	8	80,80
28826	12	**406**	120	300	4	52,00	180	300	8	104,00
28846	6	**509**	160	400	4	82,00	240	400	8	164,00
28806	24	**304**	100	300	5	50,50	150	300	10	101,00
28826	12	**406**	120	360	5	65,00	180	360	10	130,00
28846	6	**509**	160	480	5	102,50	240	480	10	205,00

* characteristic values for dimensioning according to EC 5 and strength class C 24 (ρk 350 kg/m³)

IdeFix® Drill Gauge IBG

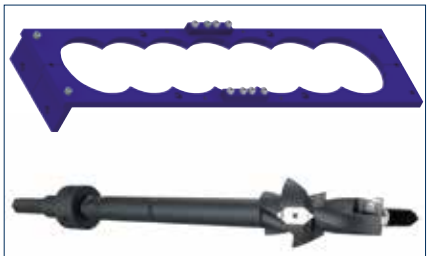

IdeFix® Drill TemPlate IBS
IdeFix® Drill IB HMB

ETA-14/0160

TAKE THE BEST

Leitbetrieb Österreich Leitbetrieb Deutschland